VitrA

Metropole Siphon w.White Ceramic Pop-Up

Product Code: 6397L003-0159

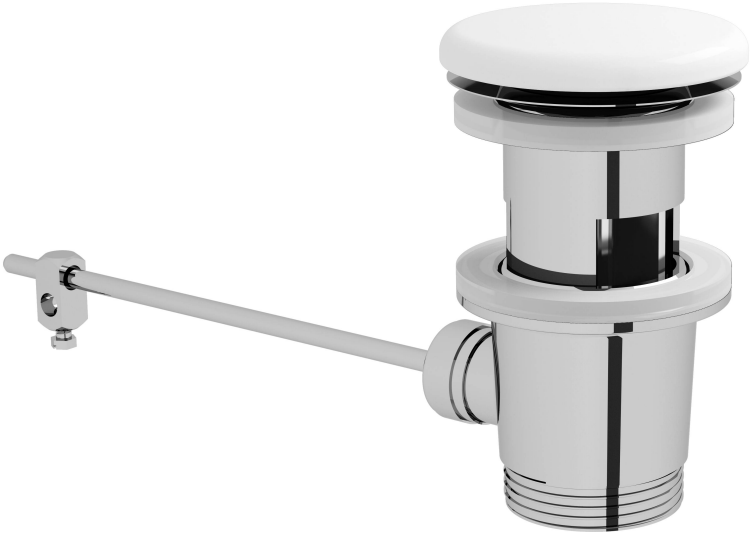

Collection: Tapa

Technical Specifications

Body Material	VC- Vitreous China
Brand	VitrA
Colour	
Depth (mm)	66
Height (mm)	107
Material	Hygiene
Series	Tapa
Width (mm)	223

Metropole Siphon w.White Ceramic Pop-Up

Product Code: 6397L003-0159
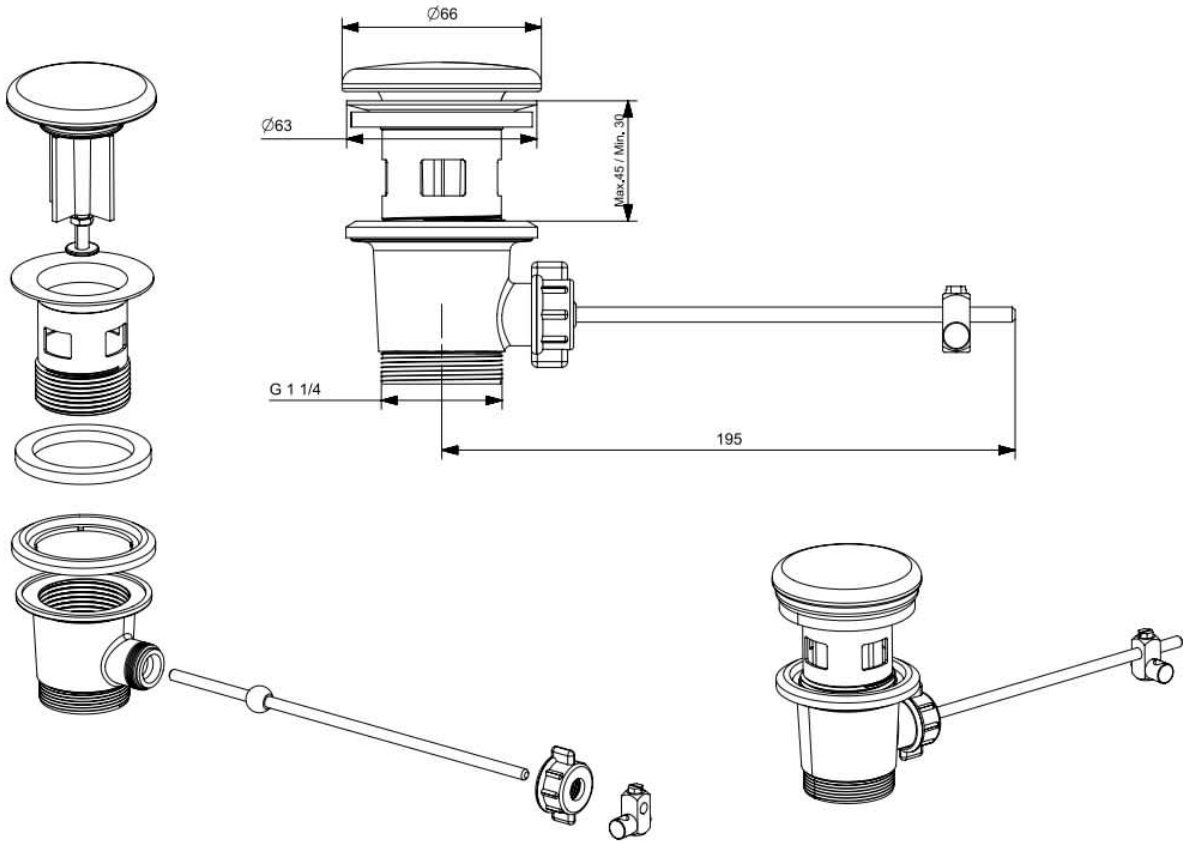
2A Technical Drawing