VitrA

Sareta Round Wall-hung Washbasin Unit – 60 cm, suitable for a vanity basin

Product Code: 69874

Collection:

Technical Specifications

Body Material	MDF
Brand	VitrA
Colour	Matt Terracotta
Connection Type	Suspended
Depth (mm)	450
Designer	Noa
Dimensions	60
Drawer/Door Option	Two Doors
Front Material	MDF
Handle	Without handle
Height (mm)	650
Leg Option	No

VitrA UK
Phone: +44 (0) 1235 750990 - info@vitra.co.uk
https://www.vitra.co.uk/ https://www.instagram.com/vitrabathroomsuk/

Sareta Round Wall-hung Washbasin Unit – 60 cm, suitable for a vanity basin

Product Code: 69874

Material	PVC
Number of Doors	2
Siphon	Syphon Not Included
Siphon Cut-out	Yes
Soft Close	Yes
Width (mm)	575

Sareta Round Wall-hung Washbasin Unit – 60 cm, suitable for a vanity basin

Product Code: 69874

2A Technical Drawing

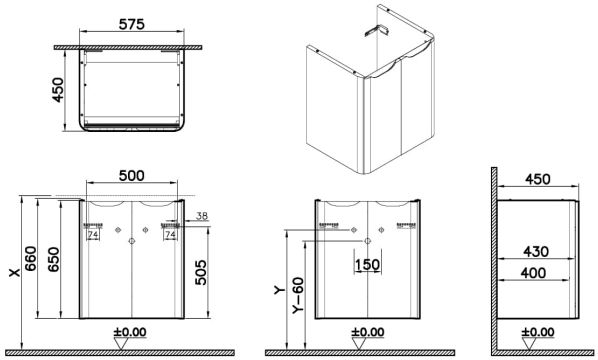

VitrA UK
Phone: +44 (0) 1235 750990 - info@vitra.co.uk
https://www.vitra.co.uk/ https://www.instagram.com/vitrabathroomsuk/