VitrA

Sareta Round Wall-hung Washbasin Unit – 80 cm, suitable for a countertop bowl

Product Code: 70045

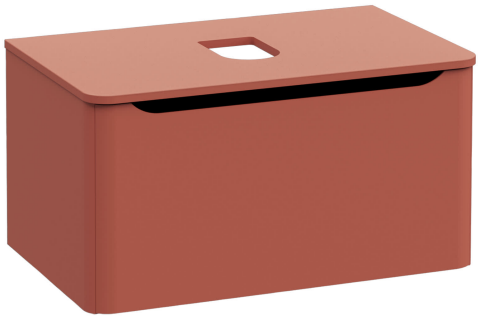

Collection: New Integra Round

Technical Specifications

Body Material	MDF
Brand	VitrA
Colour	Matt Terracotta
Connection Type	Suspended
Depth (mm)	517
Designer	Noa
Dimensions	80
Drawer/Door Option	1 drawer
Front Material	MDF
Full Extension	Yes
Handle	Without handle
Height (mm)	418

VitrA UK
Phone: +44 (0) 1235 750990 - info@vitra.co.uk
https://www.vitra.co.uk/ https://www.instagram.com/vitrabathroomsuk/

Sareta Round Wall-hung Washbasin Unit – 80 cm, suitable for a countertop bowl

Product Code: 70045

Leg Option	No
Material	PVC
Number of Doors	1
Series	New Integra Round
Siphon	Syphon Not Included
Siphon Cut-out	Yes
Soft Close	Yes
Width (mm)	765

Sareta Round Wall-hung Washbasin Unit – 80 cm, suitable for a countertop bowl

Product Code: 70045
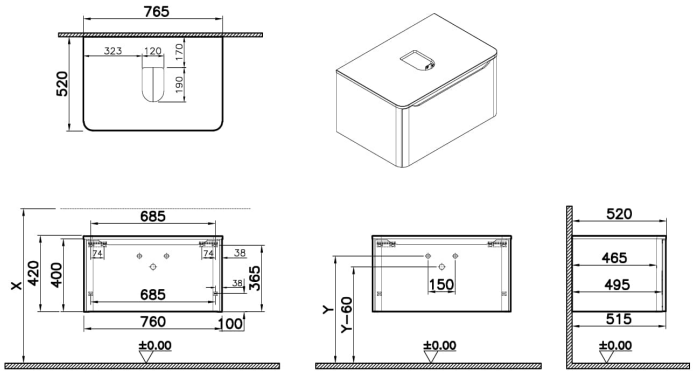
2A Technical Drawing