VitrA

# Sareta Square Wall-hung Washbasin Unit – 60 cm, suitable for a vanity basin

Product Code: 80102

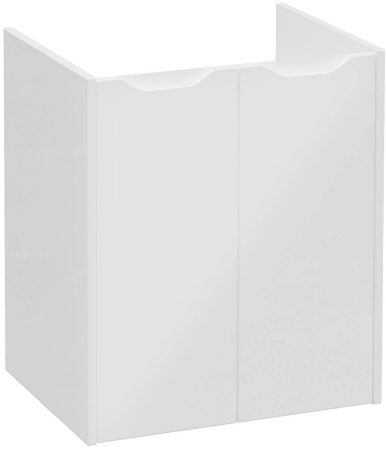

Collection:

## Technical Specifications

| | |
|---|---|
| Body Material | MDF |
| Brand | VitrA |
| Colour | White High Gloss |
| Connection Type | Suspended |
| Depth (mm) | 447 |
| Designer | Noa |
| Dimensions | 60 |
| Drawer/Door Option | Two Doors |
| Front Material | MDF |
| Handle | Without handle |
| Height (mm) | 650 |
| Leg Option | No |

VitrA UK
Phone: +44 (0) 1235 750990 - info@vitra.co.uk
https://www.vitra.co.uk/ https://www.instagram.com/vitrabathroomsuk/

## Sareta Square Wall-hung Washbasin Unit – 60 cm, suitable for a vanity basin

Product Code: 80102

| | |
|---|---|
| Material | PET |
| Number of Doors | 2 |
| Siphon | Syphon Not Included |
| Siphon Cut-out | Yes |
| Soft Close | Yes |
| Width (mm) | 565 |

Sareta Square Wall-hung Washbasin Unit – 60 cm, suitable for a vanity basin

Product Code: 80102

## 2A Technical Drawing

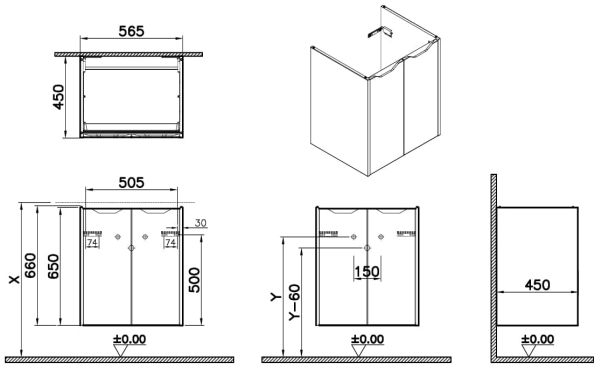


VitrA UK
Phone: +44 (0) 1235 750990 - info@vitra.co.uk
https://www.vitra.co.uk/ https://www.instagram.com/vitrabathroomsuk/