VitrA

Plural WBU,70cm,WH,Low,M.SandBei

Product Code: 81030

Collection: Plural

Technical Specifications

Brand	VitrA
Colour	Mat Beige
Depth (mm)	488
Designer	Terri Pecora
Dimensions	70
Height (mm)	662
Series	Plural
Width (mm)	684

Plural WBU,70cm,WH,Low,M.SandBei

Product Code: 81030
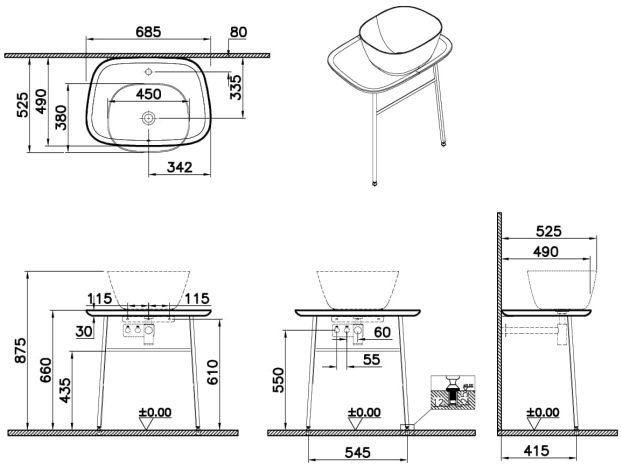
2A Technical Drawing